T4-IF

Feuille/Sheet : 1/2

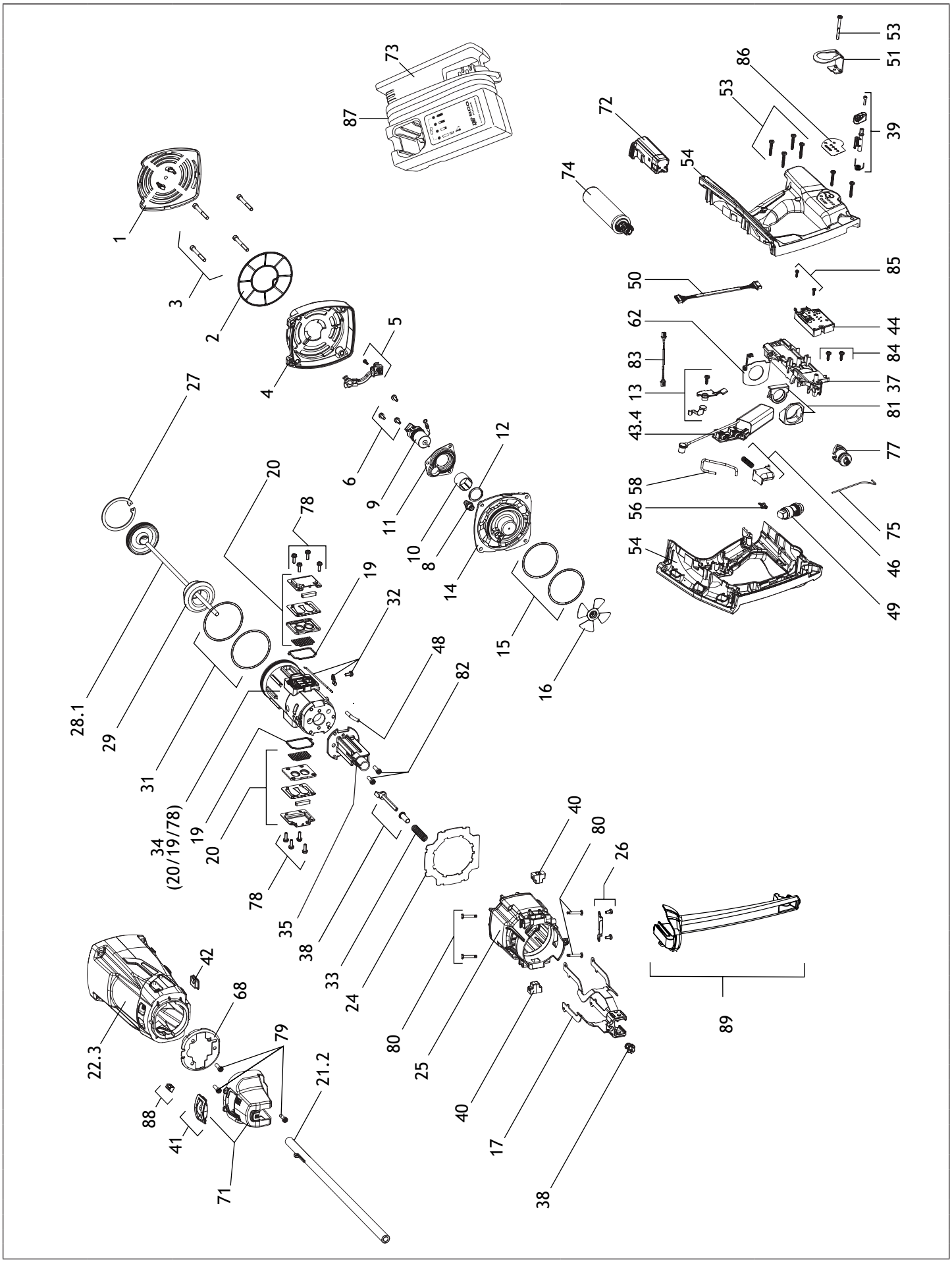

Ramset

T4 I-F

Feuille/Sheet : 2/2

N°	CODE	DESIGNATION	DESCRIPTION
1	018410	ENS. GRILLE CAPOT ARRIERE	REAR CAP GRILL ASSY
2	018411	FILTRE	FILTER
3	018412	ENS. 4 VIS CHC M5-35 P800E et P	4 CAP SCREWS CHC M5-35 P800E and P
4	018414	ENS. CAPOT ARRIERE	REAR COVER ASSY
5	013808	ENS GUIDE FIL BOUGIE	WIRE GUIDE ASSY
6	018415	ENS. VIS MOTEUR CHC M4-12 (3)	MOTOR CAP SCREWS CHC M4-12 (3)
8	013731	ENS. BOUGIE ALLUM. + JOINT	SPARK PLUG ASSY
9	018416	ENS MOTEUR ELECTRIQUE ASS.	FAN MOTOR ASSY
10	321590	GAINE MOTEUR	MOTOR SLEEVE
11	900470	SUPPORT MOTEUR	MOTOR MOUNT
12	321610	CIRCLIPS BLOCAGE MOT.	MOTOR RETAINING RING
13	018417	ENS.LEVIER CONTACTEUR MISE EN APPUI	SWITCH FOLLOWER ASSY
14	018418	CULASSE	CYLINDER HEAD
15	013356	ENS SEGMENTS CULASSE	METAL O RING ASSY
16	321660	ENS VENTILATEUR	FAN BLADE ASSY
17	018419	ENS. CAGE	CAGE ASSY
19	018421	ENS. JOINTS ECHAPPEMENT (X2)	MUFFLER O RING ASSY (X2)
20	018422	ENS.ECHAPPEMENT	MUFFLER ASSY
21.2	018578	GUIDE TAMPON	NOSE PIECE
22.3	018579	ENS. CARTER	HOUSING BODY ASSY
24	018428	MEMBRANE ETANCHEITE	AIR DAM MEMBRANE
25	018429	ENS. CHAMBRE COMBUSTION P800E/P	COMBUSTION CHAMBER ASSY P800E/P
26	018431	ENS. BUTEE CHAMBRE COMB.	COMBUSTION CHAMBER STOP ASSY
27	018432	CIRCLIPS INTERIEUR	PISTON STOP RETAINING RING
28.1	018491	ENS. MASSELOTTE INSULFAST	PISTON ASSY INSULFAST
29	018434	AMORTISSEUR	BUMPER
31	018435	ENS.SEGMENTS CYLINDRE	METAL SLEEVE O RING ASSY
32	018436	ENS. CONDUIT DE GAZ	GAS DUCT ASSY
33	018437	RESSORT CHAMBRE	CHAMBER SPRING
34	018438	ENS CYLINDRE	SLEEVE ASSY
35	018439	SUPPORT GUIDE TAMPON	PIN GUIDE SUPPORT
37	018440	SUPPORT CARTOUCHE DE GAZ	FUEL CELL SUPPORT
38	018441	ENS AXE REGLAGE DOD	DOD AXE ADJUSTMENT ASSY
39	018442	ENS. VERROU MAGASIN	LOCK MAGASIN ASSY
40	018443	ENS BUTEES CHAMBRE (x2)	RUBBER STOP ASSY (x2)
41	018444	CAPOT LEVIER DOD	DOD REAR FOLLOWER
42	018445	PART CHALEUR ELECTROVANNE	ELECTROVANNE HEAT PROTECTION
43.4	018493	MEFI P800 INSULFAST	MEFI P800 INSULFAST
44	018448	PLATINE LEDS	LEDS PLATE
46	018450	ENS DETENTE	TRIGGER ASSY
48	018436	TUBE D'ALIMENTATION	FEED TUBE
49	018453	ENS. ELECTROVANNE	INJECTION ASSY
50	018454	FAISCEAU PLATINE LED	WIRE PLATE LED ASSY
51	018455	CROCHET SUSPENSION	BELT HOOK
53	018456	ENS. VIS POIGNEE (7)	HANDLE SCREWS ASSY (7)
54	018580	ENS. POIGNEES D/G	RIGHT/LEFT SIDE HANDLE ASSY
56	013739	ENS. RACCORD SORTIE ELECTROVANNE	ELECTROVANNE PLUG CONNECTION ASSY
58	018488	VERROU DE CHAMBRE	COMBUSTION CHAMBER LOCK BAR
62	018463	ANTENNE	ANTENNA
68	018467	INSERT DEFLECTEUR	DEFLECTOR INSERT
71	018469	ENS DEFLECTEUR	DEFLECTOR ASSY
72	018581	BATTERIE	BATTERY
73	018582	CHARGEUR BATTERIE	BATTERY CHARGER
74	011773	CARTOUCHE GAZ	FUEL CELL
75	018470	TUBE INTERMEDIAIRE	INTERMEDIARY PIPE
77	018472	ENS RACCORD CARTOUCHE	FUEL CELL CONNECTION ASSY
78	018473	ENS VIS ECHAPPEMENT (4)	SCREWS MUFFLER ASSY (4)
79	018474	ENS VIS DEFLECTEUR (3)	SCREWS DEFLECTOR ASSY (3)
80	018475	ENS AXE BUTEE CHAMBRE (4)	RUBBER STOP AXE ASSY (4)
81	018476	ENS BOUTON EJECTION CARTOUCHE	FUEL CELL EJECTION BUTTON
82	018477	ENS VIS SUPPORT GUIDE TAMPON (2)	PIN GUIDE SUPPORT SCREWS(2)
83	018478	FAISCEAU MOTEUR ELECTRIQUE	ELECTRIC MOTOR WIRES
84	018479	ENS VIS SUPPORT CARTOUCHE (2)	FUEL CELL SUPPORT SCREW ASSY (2)
85	018480	ENS VIS PLATINE LED (2)	LED PLATE SCREWS (2)
86	018481	ETIQUETTE LEDS	LEDS STICKER
87	019636	CORDON CHARGEUR	POWER CORD
88	018487	BOUTON LEVIER DOD	BUTTON LEVER
89	018490	BLOC CONNEXION MONO COUP	SINGLE SHOT COVER GUARD