Paslode®

MODEL T250S-F16

16 Gauge Straight
Finish Nailer

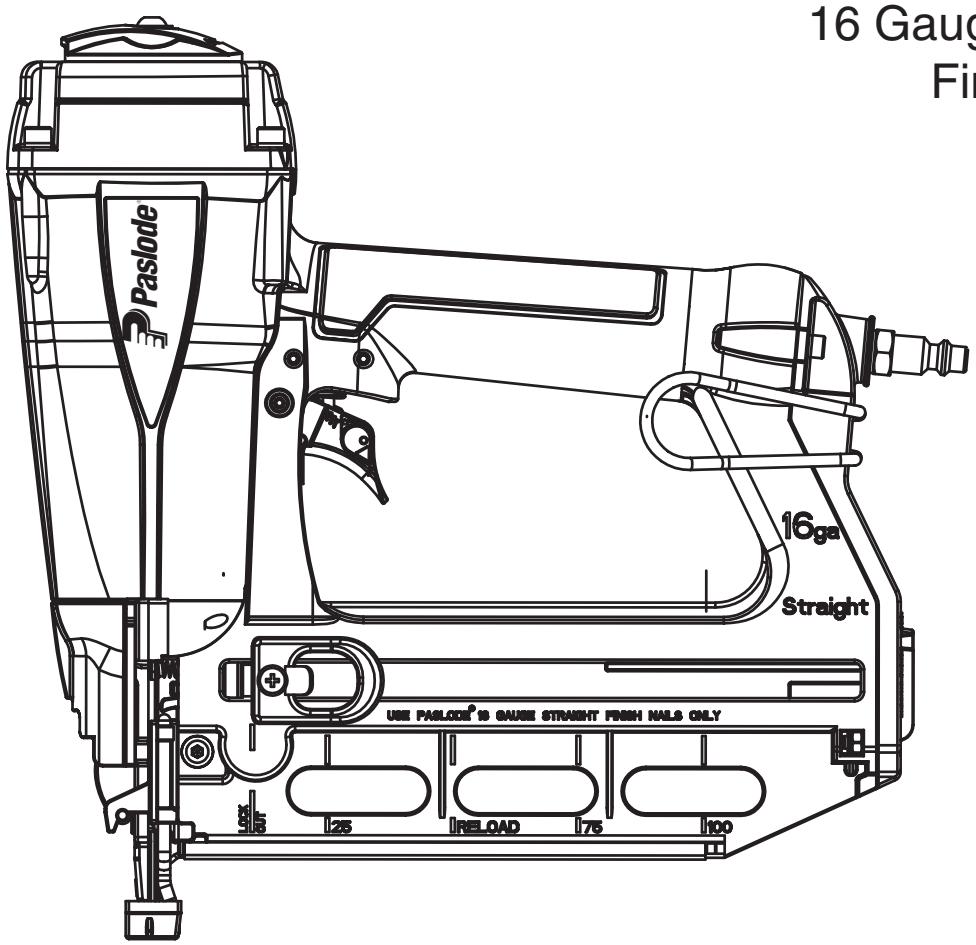

IMPORTANT!

DO NOT DESTROY

It is the customer's responsibility to have all operators and service personnel read and understand this manual.

TOOL SCHEMATIC

PARTS LEGEND T250S-F16, 501680

1	501885	1	T.H.S.C.S. 1/4-20 x 1/2
2	501896	1	Flat Washer
3	501899	1	Deflector
4	501901	1	Bolt
5	501902	1	Cap
6	501903	1	Seal
7	501904	1	Spring, Main Valve
*8	501905	2	O-Ring
9	501906	1	Head Valve Piston
*10	501907	1	O-Ring
11	501908	1	Collar
*12	501909	1	Packing
*13	501910	1	Piston Ring
*14	501911	1	O-Ring
*15	501912	1	Driver Blade
16	501920	1	Cylinder Press Ring
17	501913	1	O-Ring
18	501914	1	Cylinder
19	501915	1	Cylinder Ring
20	501916	1	Cylinder Spacer
21	501917	1	O-Ring
*22	501918	1	Bumper
23	501919	1	Driver Guide
*24	501921	1	O-Ring
*25	501922	1	O-Ring
26	501923	1	Plunger Cap
27	501930	2	Spring Pin
28	501924	1	Valve Plunger
*29	501925	2	O-Ring
*30	501926	1	O-Ring
31	501927	1	Spring
32	501928	1	Plunger
33	500999	2	O-Ring
34	501929	1	Trigger Valve Head
35	501932	1	Spring
36	501933	1	Trigger Unit
37	501965	2	Tap Bolt
38	501962	1	Lock Nut
39	501964	1	Magazine B
40	501961	1	Counter Sunk Screw
41	501934	1	Trigger Pivot Pin
42	501935	1	Housing
43	501936	1	O-Ring
44	501937	1	End Cap
45	501092	1	Dust Cover
46	501972	2	Bolt
47	501091	1	Air Plug
48	501939	1	Belt Hook
49	501938	2	Hex S.H.C.S.
50	501998	1	Spring Pin
51	501931	1	Spring Pin
52	501089	1	Urethane Retainer
53	501963	1	Steel Channel
54	501966	1	Safety B
55	501967	1	Safety Spring
56	501968	1	E-Ring
57	501969	1	Adjust Shaft
58	501387	1	Spring
59	501970	1	Safety A
60	501971	1	No Mar Tip
61	501951	1	Latch Cover
62	501950	2	Spiral Pin
63	501949	1	Front Latch Handle
64	501948	1	Front Latch
65	501947	1	Driver Guide Cover
66	501946	1	Spiral Pin
67	501940	2	Hex Soc.Hd.Bolt
68	501941	1	Driver Guide Cover B
69	501942	1	Driver Guide
70	501943	1	Stopper Finger Spring
71	501944	1	Stopper
72	501945	1	Fixed Pin
73	501953	1	Pusher Spring
74	501954	1	Pusher
75	501955	1	Spring Pin
76	501952	1	Anchor Block
77	501956	1	Negator Spring
* 78	501960	1	Magazine Steel Cover
79	501961	1	Counter Sunk Screw
80	501959	1	Tap Bolt
81	501958	1	Protecting Hood Cover
82	501962	1	Lock Nut
83	501957	1	Magazine A
84	501973	1	Nameplate
85	501302	1	Warning Label
**86	501140	1	Housing Label-left
87	501141	1	Housing Label-right
88	501995	1	Tap Bolt

* Denotes Normal Wear Items.

** Make sure Warning Label (501302) is properly affixed. Replace if necessary. Label available at no charge through the Service Parts Dept.

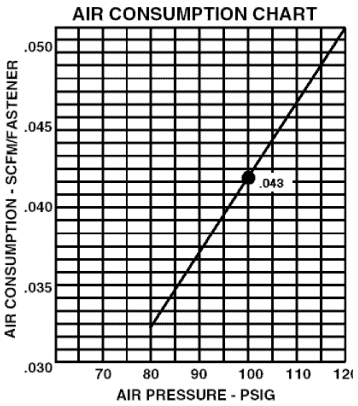

SAFETY INSTRUCTIONS

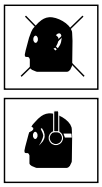

WEAR EYE AND HEARING PROTECTION

Always wear hearing protection and eye protection devices, including side shields when operating or working in the vicinity of a tool.

DO NOT EXCEED MAXIMUM RECOMMENDED AIR PRESSURE

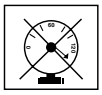

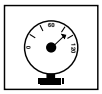

Operate the tool using only the recommended air pressure. Do not exceed the maximum air pressure marked on the tool. Be sure the air pressure gauge is operating properly and check it at least twice a day.

Never use any bottled air or gases such as oxygen to operate the tool since they could cause the tool to explode.

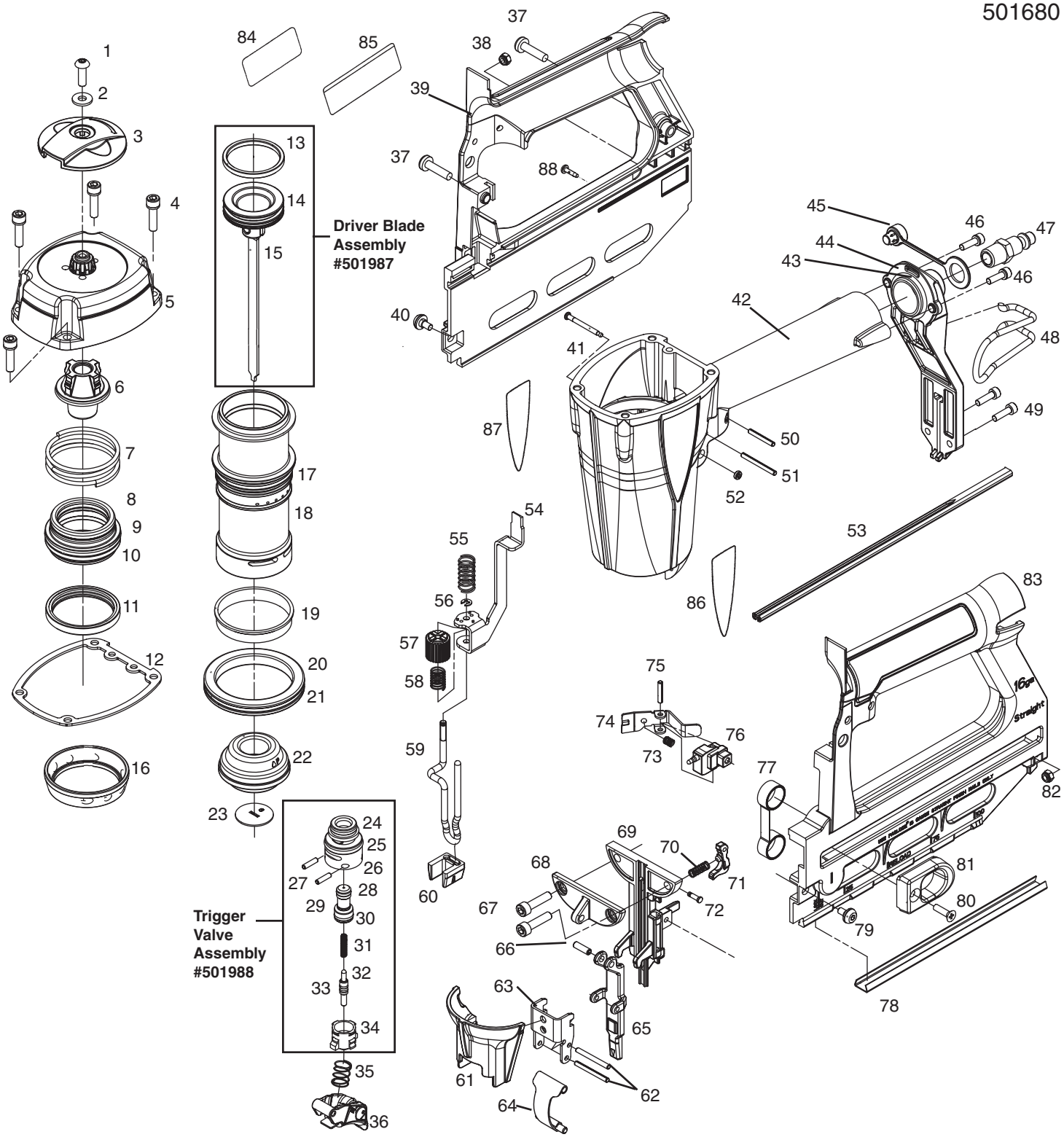

Assembly Hardware System - Metric

⚠ WARNING

All parts must be periodically inspected and replaced if worn or broken. Failure to do this can affect the tool's operation and present a safety hazard.

ACCESSORIES

.

Lubricants

Lubricating Oil 16 oz.	Part No. 403720
Lubricaing Oil with Anitfreeze 8 oz.	Part No. 219090
Chemplex 710 Lubricant 1lb.	Part No. 403734

Degreaser Cleaner

Ideal cleaner for all Paslode tools. Part No. 219086

Safety Glasses

Clear	Part No. 402510
Tinted	Part No. 402512

Tool Case

Handy carrying case that conveniently stores your tool with room for additional accessories. Part No. 501978

An Illinois Tool Works Company
120 Travail Road
Markham, Ontario
L3S 3J1
www.paslode.ca

© 2006, Illinois Tool Works, Inc.

501977-1
03/06